Technical specifications

FUNCTIONAL CLASS

Chassis

- Frame profile 60 x 30 mm
- Length chassis incl. lever 1,020 mm
- Width chassis outside 710 mm
- Outside width incl. arm rests 830 mm
- White paint finish
- Central brake, operable from both sides
- 2 pcs. double castors ø 100 mm
- 2 pcs. rigid castors ø 150 mm
- Foot keypad, removable
  (for overall/back part/seat adjustment;
  reset button; auto-run function; 3 memory positions)
- Emergency stop button
- With equipotential bonding connection

Upper frame

- 4-part support frame (head, back, seat, leg part)
- Length 1,930 – 2,160 mm
- Width of upholstery 610 mm
- Entry height 580 mm
- Removeable upholstery

	Angle	Dimensions (L x W)
• Head part	0°/+180°	275 x 280 mm
• Back part	0°/+84°	610 x 610 mm
• Seat part	-3°/+32°	510 x 600 mm
• Leg part	0°/-70°	490 x 525 mm
• Height adjustment		580 – 860 mm
• Armrests	0°/+180°	455 x 75 mm

Electrical control

- All components according to IP54
- Hand control with 8 individually programmable memory positions, auto run function, reset button
- Foot keypad

Electric Drives
- Back, seat, leg part, total up/down
- Shock position

Lifting column

- Max. lifting 280 mm
- Max. load 200 kg
- Motors IP54 with HAL sensors, to be memorized

Seat part

Back part/leg part

Height adjustment

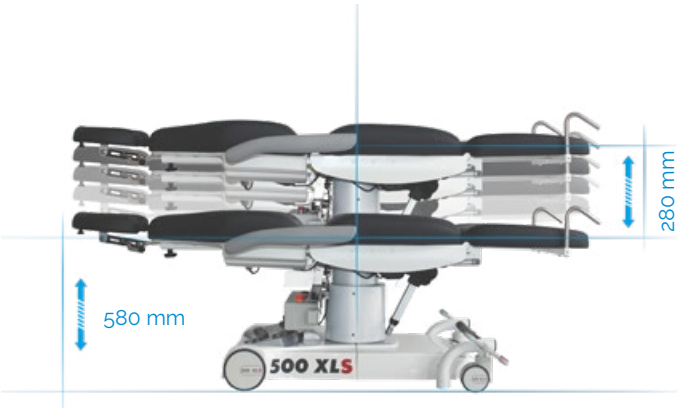

Powerful accumulators

- Battery box with 2 batteries (lead-gel), pollution free, maintenance-free, cadmium-free 2 x 12 V, 7,2 Ah
- As back-up-system exchangeable without tools
- Acoustic low voltage signal for discharge protection
- Universal battery charger Input: 100 – 240 V
  Output: 30 V

Operating time per battery charge
- Measured by operating circle (Prepare-Operate-Recover) 100 OPs
- Quantity of operating circles depends on individual operation

Mains-free operation

Easy recharging of the equipment thanks to charging adapter and integrated battery charger circuit board.

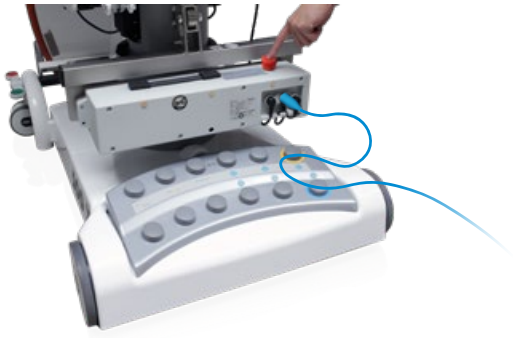

Simple battery replacement

Extra security thanks to exchangeable battery box. Easy replacement of discharged battery boxes.

Further technical details

- Chair has detachable, swiveling armrests made completely with PUR foam
- All touchable metal parts are grounded
- Detachable seat for service friendly access to electric components

Max. load 200 kg

Weight 100 kg

Subject to technical modifications.

Equipment protection

Cover drape *stay**Clean***

2,000 x 730 mm, box á 160 Pieces
4 x 40 Pieces **Item No.:** *3034 0014*

Page 64

Color card

Standard color anthracite **Item No.:** *3037 0052*

“Tundra skai”
Page 102

“Pandoria Plus”
Page 103